Model No. DHP453 CORDLESS PERCUSSN-DRIVER DRILL

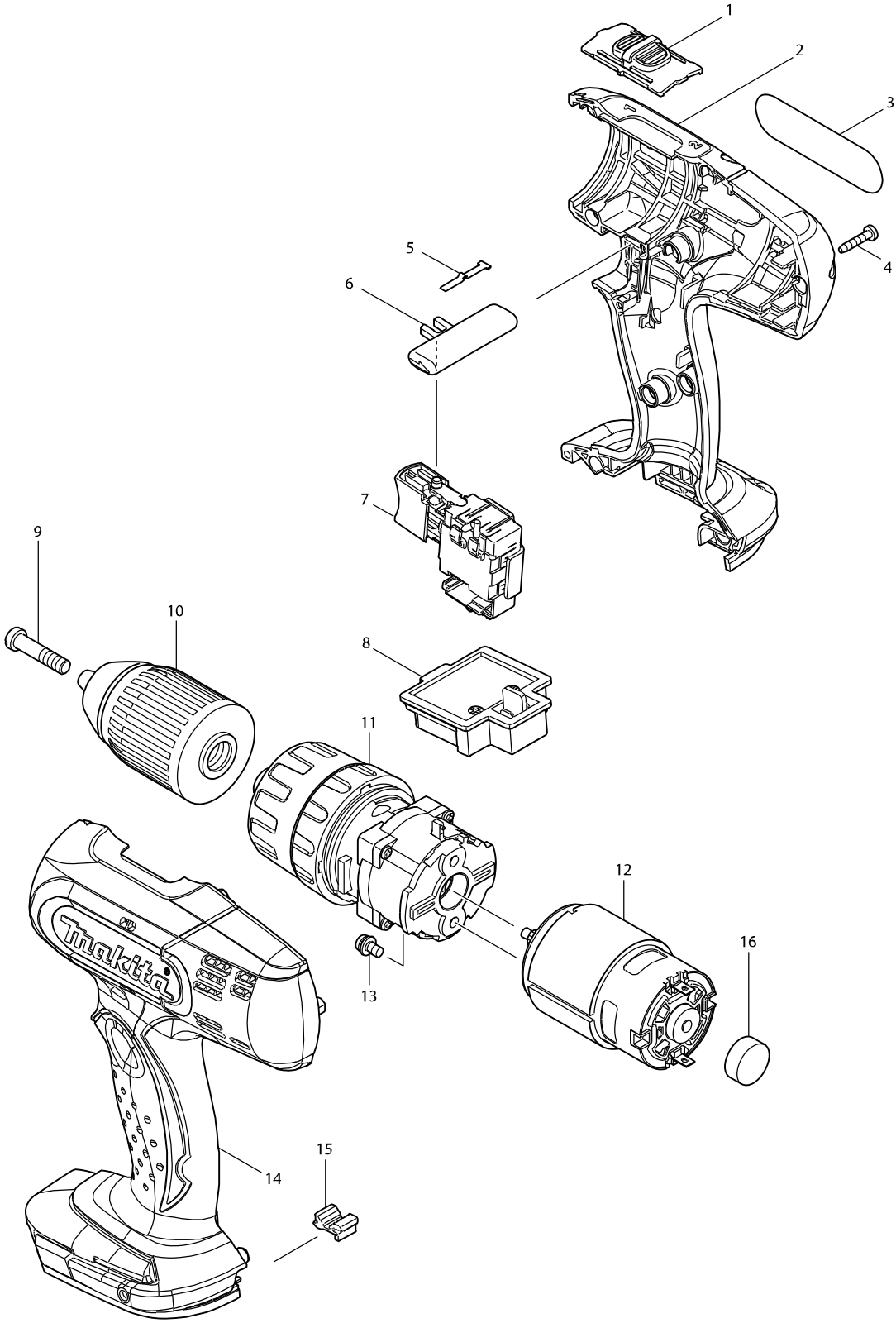

Model No. DHP453 CORDLESS PERCUSSN-DRIVER DRILL

Item	Parts No.	Description	I/C	Qty	N/O	Opt. 1	Opt. 2	Note
001	125310-5	SPEED CHANGE LEVER ASS'Y		1				
C10	231433-0	COMPRESSION SPRING 4		2				
002	187363-2	HOUSING SET		1				
C10	263005-3	RUBBER PIN 6		2				
D10		INC. 14						
003	815J03-9	DHP453 NAME PLATE		1				
004	266130-9	TAPPING SCREW BIND PT 3X16		9				
005	232182-2	LEAF SPRING		1				
006	419250-0	F/R CHANGE LEVER		1				
007	632A24-0	SWITCH UNIT		1				
008	643852-2	TERMINAL		1				
009	251468-5	- FLAT HEAD SCREW M6X22		1				
010	766004-9	KEYLESS DRILL CHUCK 13		1				
011	125485-0	GEAR ASS'Y		1	*			
011-1	125485-0	GEAR ASS'Y	O	1				
012	629937-8	DC MOTOR		1				
013	911108-4	PAN HEAD SCREW M4X8		2				
014	187363-2	HOUSING SET		1				
C10	263005-3	RUBBER PIN 6		2				
D10		INC. 2						
015	424476-1	CUSHION		1				
016	421940-3	CAP		1				
A01	784636-0	+- BIT 2-65		1				
A02B	***DC18SD	DC18SD BATTERY CHARGER		1				
A02C	***DC18RC	DC18RC FAST CHARGER		1				
A03-1B	196235-0	BATTERY BL1815N SET		2				
A03-1C	196399-0	BATTERY BL1840 SET		2	*			
A03-2C	197265-4	BATTERY BL1840B SET	<	2				
A04	450128-8	BATTERY COVER		1				
A05	158777-2	PLASTIC CARRYING CASE		1				
C10	163455-1	LATCH		2				
C20	419360-3	HANDLE		1				

Please order the parts with a part number.

Print Date 27/09/2016